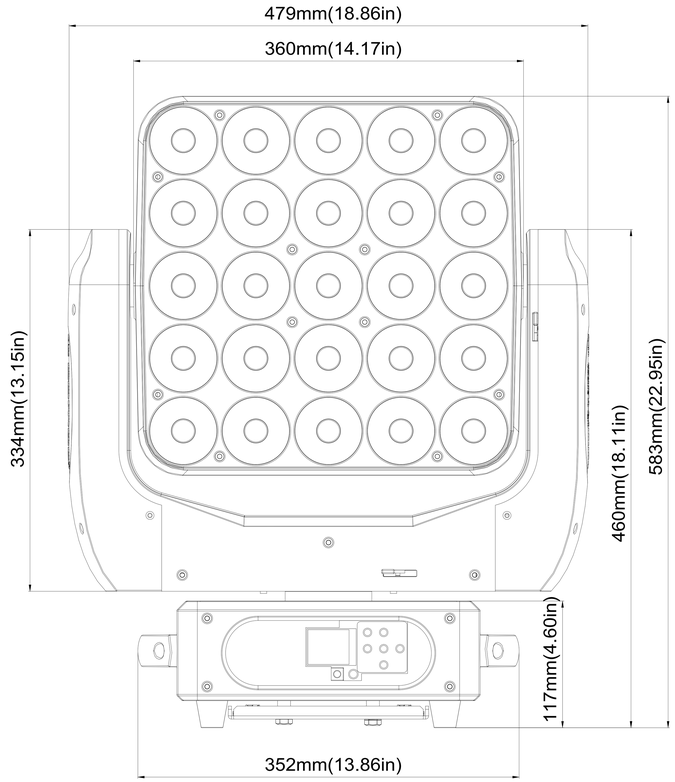

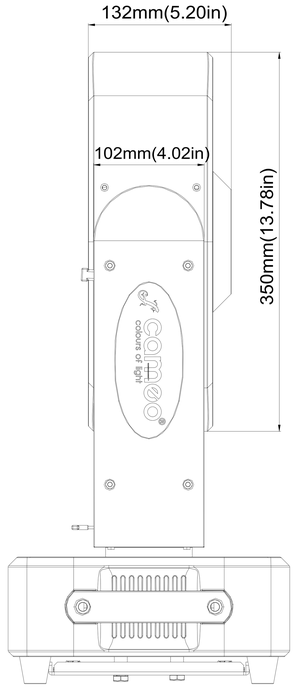

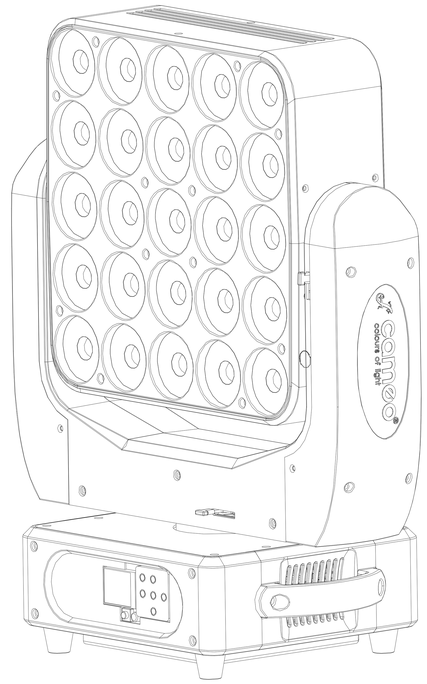

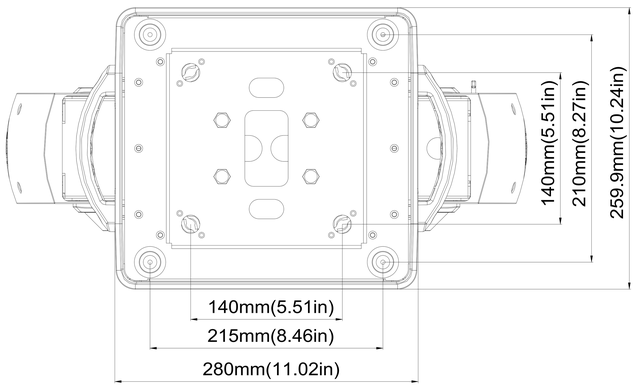

CLAM 500
AURO MATRIX 500

cameo
colours of light

cameo is a brand of Adam Hall Group
Adam Hall GmbH - Daimlerstraße 9 - D-61267 Neu-Anspach - Germany
Telefon +49 (0) 6081 / 94 19-0 - Fax +49 (0) 6081 / 94 19-1000 - www.adamhall.com

Rev. 1.0.0